# IEEE Technology Report on Wake-Up Radio:

## An Application, Market, and Technology Impact Analysis of Low-Power/Low-Latency 802.11 Wireless LAN Interfaces


**Preview Copy - Full Report Available 2 November 2017**

IEEE
Advancing Technology for Humanity

# Table of Contents

# 1 Introduction

## 1.1 Wake-Up Radio and the Internet of Things

Most "smart devices" today are smartphones, tablets, smart watches, laptop computers, and other similar devices. Beginning sometime in 2018, however, non-cellular remote sensors and devices will begin outnumber smartphones, and by 2020 they will account for more than half of all Internet-connected things. [1] The potential applications for non-cellular remote sensors are limited only by battery life, bandwidth, radio range (all inter-related), and the designers' imaginations. They include smart factories and warehouses, smart homes, wearable health devices, smart cars, smart grids, and smart cities. [2]

These remote sensors and devices will be off the power grid. They will instead depend on batteries, solar power or wireless energy transfer - sources of pwer that oblige designers to stretch each milliwatt as far as they can.

A new standard for Low-Power Wake-Up Radio (LP-WUR) for Wi-Fi networks, now being developed by the IEEE 802.11ba Task Group (TGba) is an important tool in the effort to substantially reduce remote-device power consumption and extend battery life. Without greater power economy, building some applications could be impossible, - while frequent maintenance and battery changes would make others economically impractical. [3]

This report looks at Low-Power Wake-Up Radio's potential impact on device longevity in the Internet of Things; the market opportunity and technical challenges of selected use cases; the magnitude of the aggregated IoT market; how IEEE 802.11 Wi-Fi communications fits into the scheme of IoT things; and details TGba's approach to Low-Power Wake-Up Radio.

## 1.2 Battery Life: The Critical Factor

Today's smartphones usually have at least three main radios: the medium-range wireless local area network (WLAN or Wi-Fi), the longer range cellular radio, and the short-range Bluetooth personal area network. These may be joined by near field communications and Global Positioning System radios, and accommodate an increasing number of legacy protocols for each radio.

The Wi-Fi, cellular, and Bluetooth protocols are also the three main candidates for connecting the Internet of Things—and each has strengths and weaknesses.

Wi-Fi (IEEE 802.11) fits seamlessly into the IEEE 802 ecosystem that includes Ethernet (IEEE 802.3)—and between the two, carry the lion's share of the world's digital data and offer straightforward integration with the Internet and web-based services. [See Appendix 1 for a table of the principle IEEE 802 working groups and a quick review of some IEEE 802.11 Wi-Fi amendments that have expanded the standard over the past two decades.] Wi-Fi and Ethernet are designed to accommodate high-bandwidth data, such as streaming videos and file sharing systems. Wi-Fi can operate through user-owned equipment and transmits on unlicensed radio frequencies. This makes it relatively easy and economical to set up wireless LANs. By the same token, setting up a Wi-Fi network can require some configuration. Until now, Wi-Fi has had a reputation for high power consumption, which has limited the service lives of remote devices in the field. Low-Power Wake-Up Radio is aimed at provided a well-integrated power-conservation tool to remedy this shortcoming.

Cellular radios—including data-oriented 4G and 5G services—offer long reach over licensed frequencies via commercially owned and maintained infrastructure. Cell service is highly reliable with low latency over wide areas, though users must generally use cell-system providers' equipment and pay access fees. Cellular communication remains focused on the base station: the cell tower. While there are proposals for supporting direct device-to-device communication on the edge, those standards are still being drafted and it is unclear whether and how this will be implemented.

Bluetooth offers a short-distance, low-power connection. It was originally designed to connect cell phones with wireless peripherals like headsets, and has been oriented towards lower-bandwidth applications.

Smartphone users know that leaving the phone's screen and radios active can drain a battery in just a few hours. For example, an iPhone 7 with a 1,960 milliamp-hour battery may deliver about 15 hours of 3G phone talk time, 12 hours of Internet browsing over an LTE cell connection, or 15 hours of Internet access over Wi-Fi. Short-range Bluetooth radios transmit at 1 to 2.5 milliwatts. Cellular and Wi-Fi radios generally broadcast at anywhere from 100 to a maximum of 1,000 milliwatts. But they clearly do not transmit constantly at full power; if they did, that 1,960 milliamp-hour battery would last no more than five or six hours, even if the phone used no power for anything else.

Various amendments to the 802.11 Wi-Fi standard (e.g., 802.11a, 802.11b, 802.11g, etc.) call for transmitting at lower power where appropriate (or where required by a complex web of regulatory and engineering requirements) at around 20 to 100 mW EIRP (equivalent istotropically radiated power, a figure that takes the antenna's signal boost into account). These are estimated figures as actual power usage can vary in response to the details of the protocol and environmental conditions.

There are always trade-offs when trying to conserve power. Lower-power transmissions, for example, may also reduce the signal-to-noise ratio—lowering data rates and necessitating longer transmissions. Longer transmission times require more power, negating some of the apparent economy of switching to lower power. Duty-cycling is a frequent solution for power conservation. The radio turns off and goes to sleep when not in use, waking up for just a few milliseconds at intervals from a tenth of a second to an hour, to see if anybody is trying to get through.

Early in the LP-WUR process, TGba chair Minyoung Park calculated that running a Wi-Fi radio at a 2% duty cycle in "legacy power saving mode"—having it wake up for 2 milliseconds out of every 100—should reduce average idling power drain from about 100 mW to about 1.6 mW. [4] This would stretch the idling time of a 130 mAh battery life from a few hours to about three days. The exact power saving depends on a variety of factors; this example illustrates the general kinds of improvement LP-WUR should produce, rather than predicting specific performance.

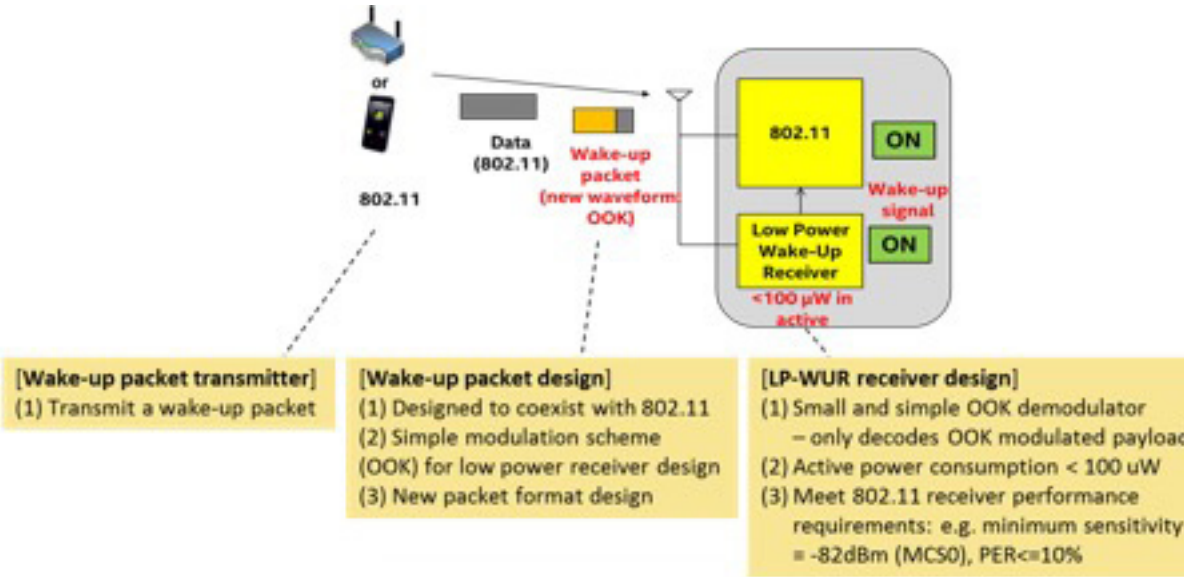


FIGURE 1. OVERVIEW OF LOW-POWER WAKE-UP RADIO FOR 802.11

*The proposed IEEE 802.11ba Low-Power Wake-Up Radio design adds a second radio, drawing less that 100 microwatts when it is active to the remote device - allowing the more powerful main radio to remain asleep until needed to transfer data. Source: Low-Power Wake-Up Receiver (LP-WUR): Enabling Low-Power and Low-Latency Capabitility for 802.11 (IEEE 802.11-16/0027r0)*

# 1 Introduction

The IEEE 802.11ba Wake-Up Radio plan adds a second, low-power radio receiver to the device. The low-power radio listens silently, waiting for the network to call its name. Only then does the device turn on its main Wi-Fi radio and begin exchanging data. This is not a new technique by any means, observers point out, as it has been used on an ad hoc basis many times in the past[5]; TGba is new, however, in adding Low-Power Wake-Up Radio to the 802.11 standard. In Park's analysis, an always-on Low-Power Wake-Up Radio (LP-WUR) would consume about 0.105 mW. Applying a 2% duty cycle to a LP-WUR would drop radio power consumption to about 0.007 mW.

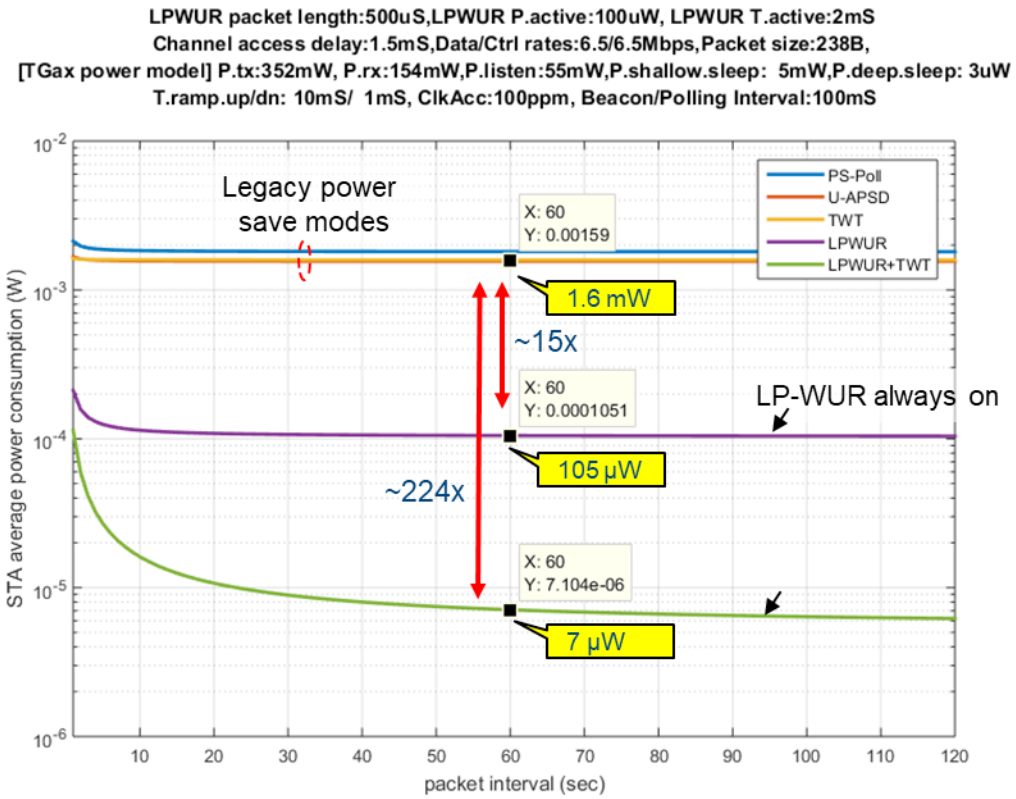


FIGURE 2: REDUCING DEMAND FOR BATTERY POWER (TGBA)

*Legacy power-saving mode (2% duty cycling, with Wi-F main radio waking up for 2 milliseconds every 100 milliseconds) cuts power usage to about 1.6 Mw. Low-Power Wake-Up Radio in constant operation would use only about 0.105 Mw, and LP-WUR on a 2% duty cycle would cut power demand to just 0.007 Mw. Source: LP-WUR (Low-Power Wake-Up Receiver): Enabling Low-Power and Low-Latency Capability for 802.11 (IEEE 802.11-16/0027r0) [4]*

The impact on battery life is dramatic. An always-on 100 mW Wi-Fi main radio might drain a 3-volt, 130 milliamp hour (mAh) battery in under four hours. Duty-cycling the same radio might increase battery life to more than 3 days. Operating a Low-Power Wake-Up Radio on the same duty cycle, though, could stretch battery life to 694 days. [4] Reduce the duty cycle still further and add engineering expertise to streamline signal handling, and engineers can look forward to thousand-fold increases in battery life and years of operation on a single charge.

Engineers working on LP-WUR point out an interesting trade-off in coordinating wake-up periods for duty-cycling applications: highly accurate clocks consume more power. Lower-power clocks, like those chosen to extend battery life in a remote device, tend to drift more over time. Access points will have to make allowances for this drift and open longer check-in windows in order to catch the Wake-Up Radio (WUR) when it is awake and resynchronize its clock. The accommodation could theoretically work the other way, with the WUR starting its own duty cycle early to be sure to catch a very punctual access point. This would increase WUR power consumption, and negate some of the advantages of LP-WUR.

# End of Section 1 Preview

# 3 Wake-Up Radio and IoT: Use Cases, Market Opportunities and Challenges

What makes market forecasting so uncertain is also what makes the Internet of Things so exciting: No one really knows what all those Internet of Things devices will be. Some use cases are clear, especially in the short term. Others are yet to emerge.

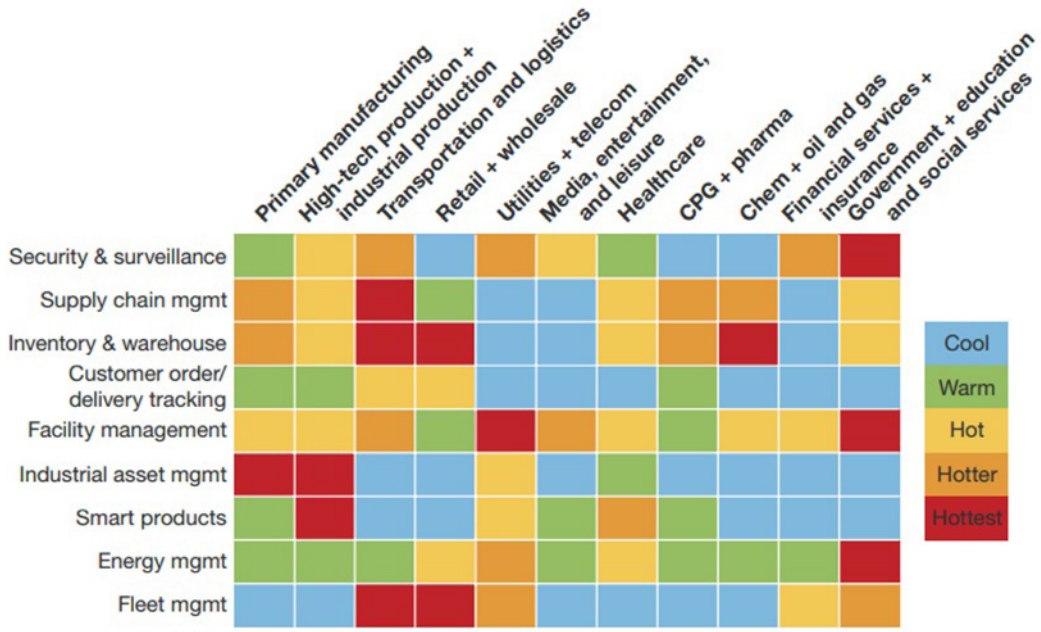


FIGURE 3.HEAT MAP OF IOT OPPORTUNITIES

*How avidly important segments are pursuing the principal Internet of Things applications and use cases, according to Forrester. Source: Forrester. Used by permission [62]*

Products are already moving into many IoT markets, and more are in the pipeline. But manufacturers still need to gain valuable experience in developing connected devices and services. Will implementation expertise continue moving upstream, from the OEM to the component suppliers? And to what extent will electric utilities, automobile manufacturers, or home appliance makers find themselves enmeshed in telecommunications technology that is far from their core businesses?

**End of Section 3 Preview**

# 6 Appendix 1: Wake-Up Radio and the IEEE Standards Process

The IEEE standards system strives to be open and transparent. Standards working groups are open to all technically qualified participants. New IEEE Standards begin with an idea. A general outline for a new standard or an amendment to an existing standard goes through a formal process that generates a Project Authorization Request (or PAR), that lays out the rationale for developing a new standard and outlines the scope of the effort required to write it.

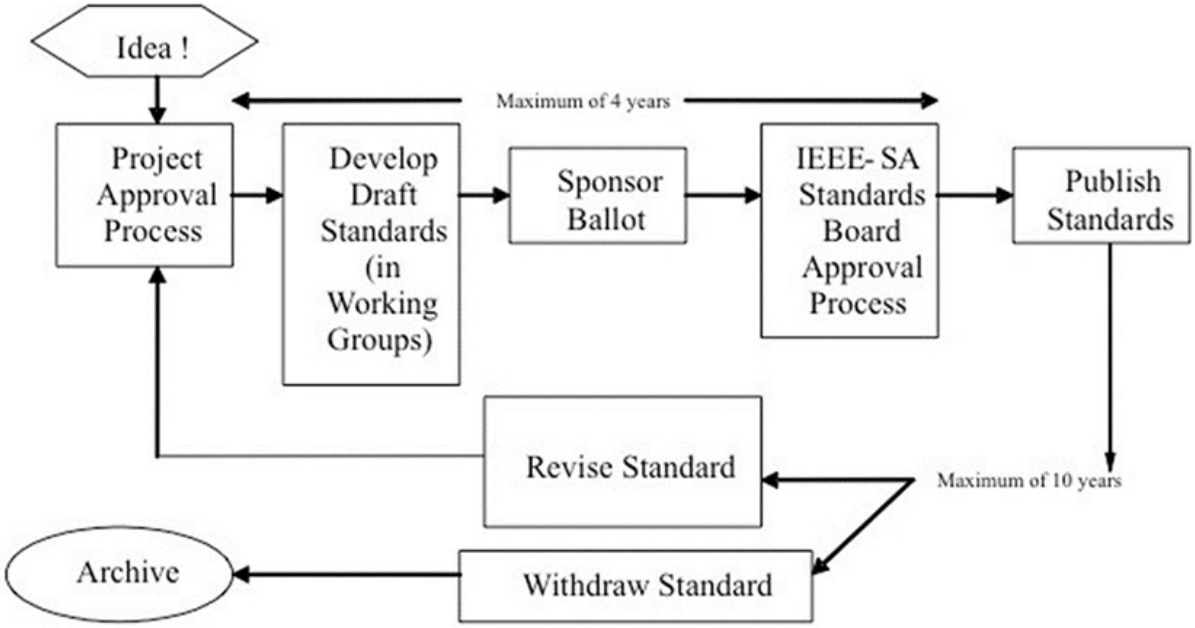


FIGURE 4. IEEE STANDARDS FLOWCHART. SOURCE: IEEE STANDARDS ASSOCIATION [67]

After study groups examined the need for Low-Power Wake-Up Radio in 2016, the IEEE 802.11 Working Group wrote a PAR to formally state the needs and scope of the project, and establish the 802.11ba Wake-Up Radio Task Group (or TGba). Initiatives for amending the IEEE 802.11 standard are issued a letter designation in the order in which they are accepted. The series began with TGba for the first 802.11a standard, ran through the alphabet to z—with gaps—then started over with two-letter designations from aa to az—also with gaps—and now TGba begins the third series.

TGba began meeting in January 2017. The initial specification process was expected to take about 10 months, producing a "Draft 0.1" in November 2017, followed by a first draft standard around March 2018, and a second draft in September 2018. That draft standard will be available while the draft undergoes Mandatory Document Review (MDR) in March 2019 and formal Sponsor Balloting (SB) before going to the IEEE Standards Association Review Committee for recommendation to the IEEE Standards Association Standards Board that it become an accepted part of the 802.11 standard. [62, p. 33]

The 802.11 Working Group membership includes some 300 voters. Participation is open, and members come from big companies (manufacturers of communications equipment, computer components, computers, storage media, and software), universities, government, small companies, and single-person engineering shops. Participants' names and affiliations are listed on the 802.11 Working Group website (http://ieee802.org/11/), which also includes comprehensive information on the group's activities. Proposals and analyses clearly identify their contributors.

# End of Section 6 Preview

IEEE

Advancing Technology for Humanity

Published by IEEE
445 Hoes Lane, Piscataway, NJ, 08854